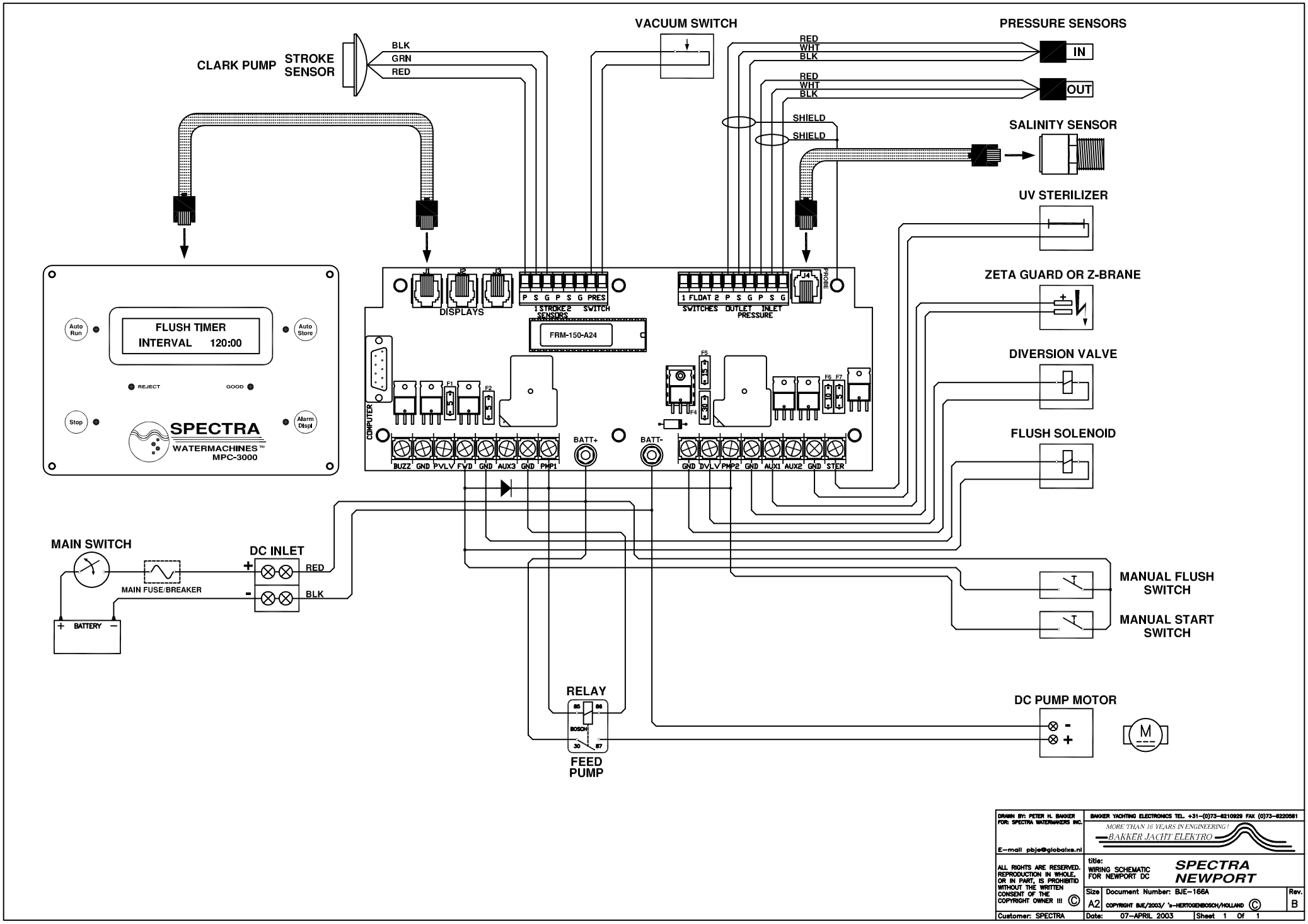

DRAWN BY: PETER H. BAKKER
FOR: SPECTRA WATERMAKERS INC.

E-mail pbje@globalxs.nl

BAKKER YACHTING ELECTRONICS TEL. +31-(0)73-6210929 FAX (0)73-6220581

MORE THAN 16 YEARS IN ENGINEERING!
BAKKER JACHT ELEKTRO

ALL RIGHTS ARE RESERVED. REPRODUCTION IN WHOLE, OR IN PART, IS PROHIBITID WITHOUT THE WRITTEN CONSENT OF THE COPYRIGHT OWNER !!! ©

title: WIRING SCHEMATIC FOR NEWPORT DC

SPECTRA NEWPORT

Size	Document Number: BJE-166A	Rev.
A2	COPYRIGHT BJE/2003/ 's-HERTOGENBOSCH/HOLLAND ©	B

Customer: SPECTRA | Date: 07-APRIL 2003 | Sheet 1 Of 1